MORE THAN SENSORS

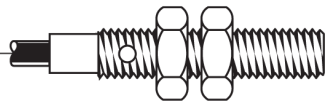

Part number: C30000016 - Model: SC30SP-C20 PNP NO+NC

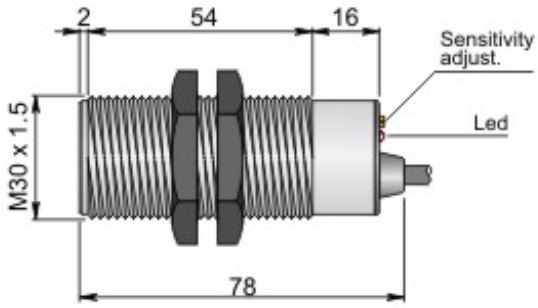

Dimension in mm

TECHNICAL CHARACTERISTICS	
Working voltage:	10 ÷ 55 Vdc
Output type:	DC PNP
Function:	NO+NC
Actuation type:	Instantaneous
Sensing distance (mm):	0 ÷ 20 (adjustable)
Hysteresis (%Sn):	Depends on the switching distance
Max. switching frequency:	10 Hz
Repeatability (%Sn):	< 1
Max. output current:	300 mA
Absorption:	< = 10 mA @ 24Vdc
Voltage drop:	< 1.8 V
Short circuit protection:	Present
Led indicator:	Present
Shielding:	Embeddable
Mechanical characteristics:	M30x1.5
Housing material:	Plastic
Connection type:	Cable 3 m
Cable type:	4x0.25 PVC
Temperature limits:	-20 ÷ +70 °C
IP rating:	IP 67
Weight:	260 g

AECO S.r.l. 20065 Inzago (MI) Italy - Via G. Leopardi, 5 - Tel. +39 02 954381 - Fax +39 02 9548528
http://www.aecosensors.com - e-mail: aeco@aecosensors.com

MORE THAN SENSORS

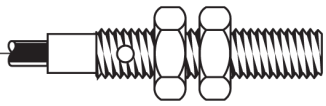

Part number: C30000016 - Model: SC30SP-C20 PNP NO+NC

WIRING DIAGRAM

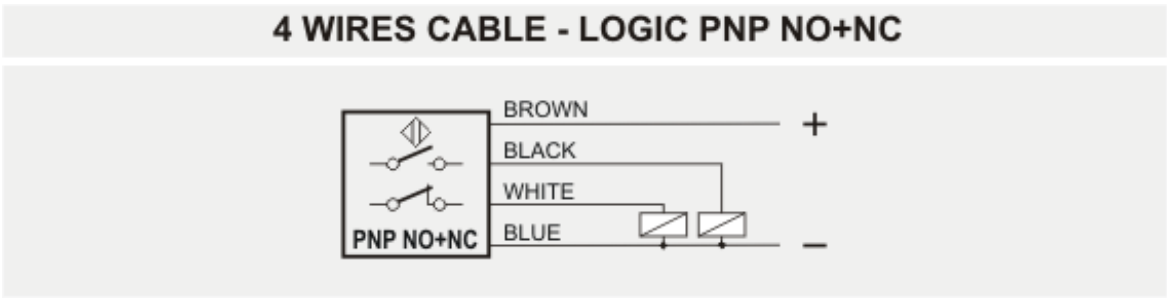

INSTRUCTIONS FOR CORRECT INSTALLATION

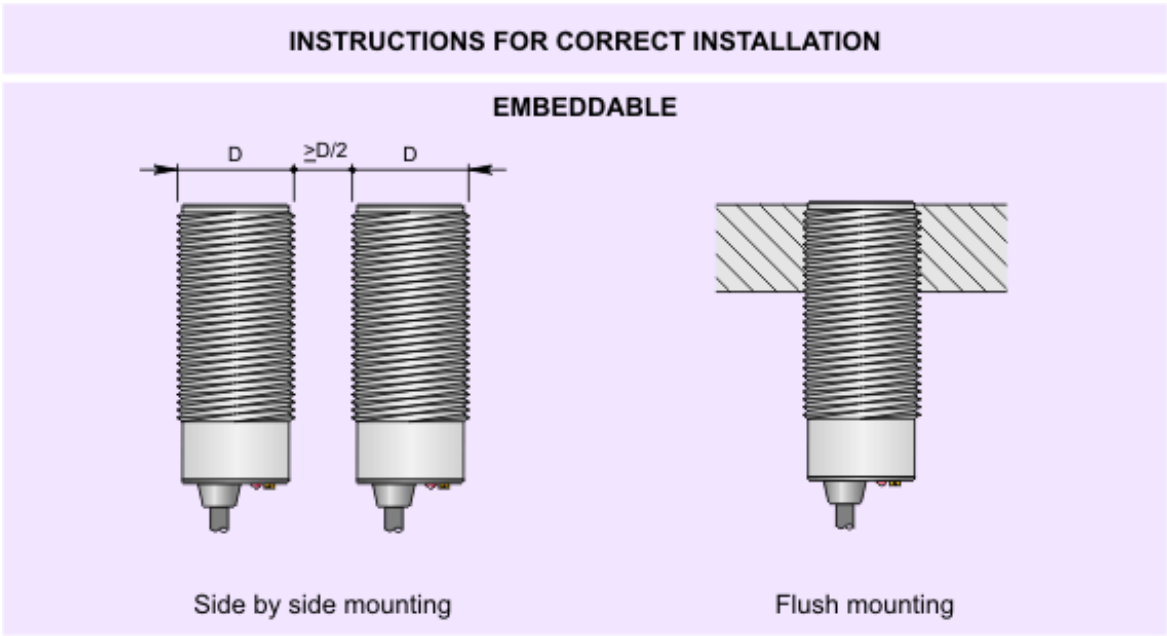

AECO S.r.l. 20065 Inzago (MI) Italy - Via G. Leopardi, 5 - Tel. +39 02 954381 - Fax +39 02 9548528
http://www.aecosensors.com - e-mail: aeco@aecosensors.com